

بسمه تعالی

دانشگاه شهید باهنر کرمان
دانشکده فنی و مهندسی
بخش مهندسی معدن

بررسی ساختگاهی
ترم اول ۱۳۹۷
(۷)

سعید کریمی نسب

Site Investigation Course-1397
Kariminasab

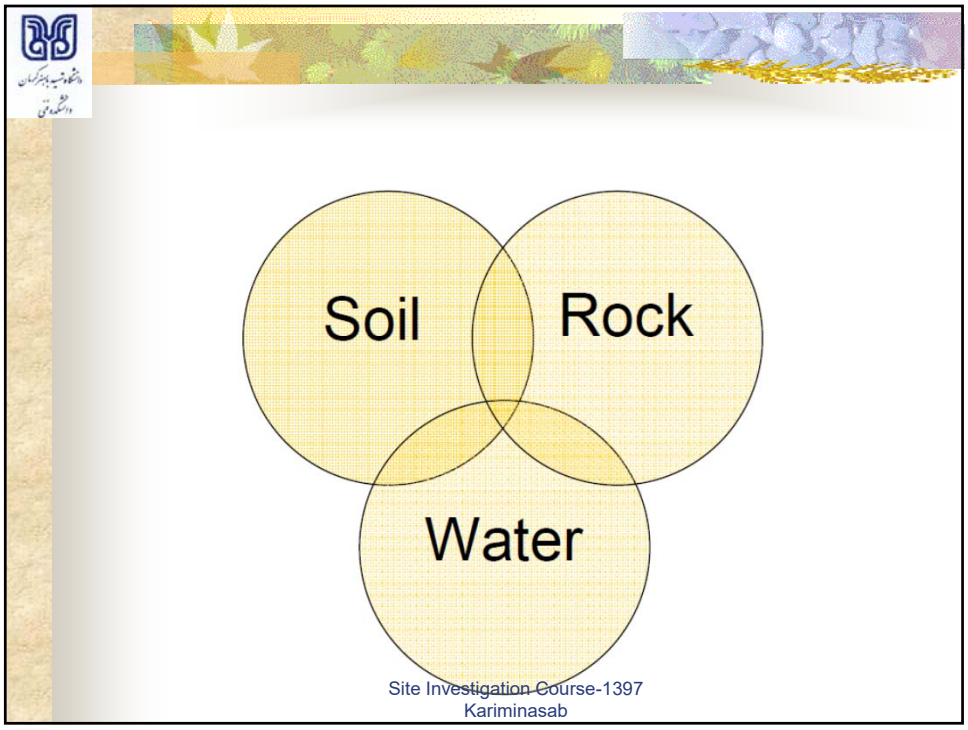

Soil Exploration

- Determination of surface and subsurface soil conditions and features in an area of proposed construction that may influence the design and construction and address expected post construction problems. Also known as soil investigation.

Site Investigation (SI) Objective

- Obtain sufficient information to enable a safe and economic design to be made and to avoid any difficulties during construction

Methods of Investigation

- The methods to determine the sequence, thickness and lateral extent of the soil strata and, where appropriate the level of bedrock. The common methods include:

1. **Test pits**
2. **Boring or drilling**

1. Test Pits

- The excavation of test pits is a simple and reliable method.
- The maximum depth is limited to 4-5m only.
- If the pit is to be extend below the GWT, some form of dewatering is necessary.

1. Test Pits

- The in-situ conditions are examined visually.
- It is easy to obtain disturbed and undisturbed samples.
- Block samples can be cut by hand tools and tube samples can be taken from the bottom of the pit.
- Test pits are suitable for investigations in all type of soil, including those containing cobbles or boulders.

1. Test Pits

- Walls of the test pit indicate four layers (1) Clayey silt (2) Sandy silt (3) Clean sand (4) Sandy gravel

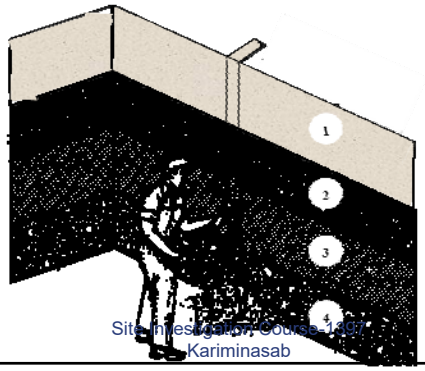

Test Pits



Test Pits



Test Pits



2. Boring or Drilling:

- Boring refers to advancing a hole in the ground.
- Boring is required for the following:
  - To obtain representative soil and rock samples for laboratory tests.
  - To identify the groundwater conditions.
  - Performance of in-situ tests to assess appropriate soil characteristics.

2. Boring or Drilling:

- Some of the common types of boring are as follows:
  - Auger boring
    - Hand Augar
    - Mechanical Augar
  - Rotary drilling
  - Wash boring
  - Percussion boring

Sampling approaches

Surface soils

- Shovel or hand-auger
- Sterile technique



- Rhizosphere – a special case

Distance from root surface (mm)	Number of types Distinguishable	Estmated frequency 10^9 cells/cm^3
0 - 1	11	120
1 - 5	12	96
5 - 10	5	41
10 - 15	2	34
15 - 20	2	13

Subsurface unsaturated zone

- Hand-auger
  simple
  cheap
  0 – 20 ft



- Hollow stem auger
  split spoon sampling
  push-tube sampling
  20 – 100 ft

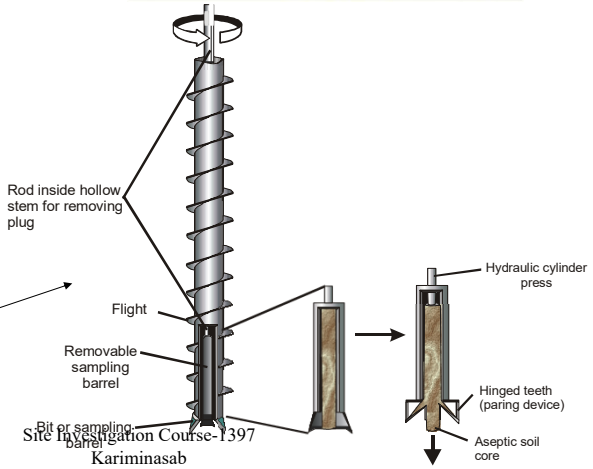

- Air drilling and coring
  hundreds of meters

Subsurface saturated zone

- Shallow depth, hollow-stem auger combined with:
  - split-spoon sampling
  - push-tube sampling
- Deep subsurface →
  - mud rotary coring

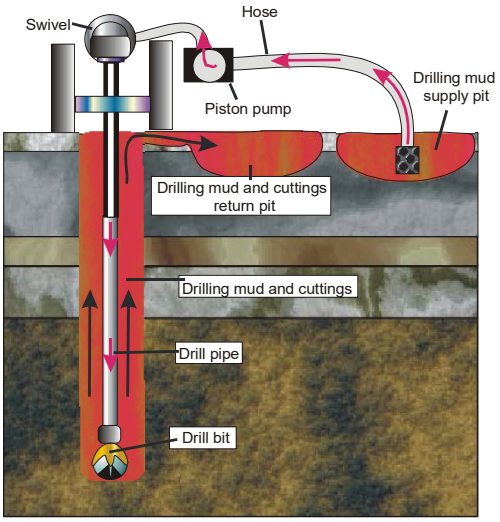

Groundwater

- Flushing/sterile sampling

Sample Processing and Storage for Soil

- Store samples at 4^0C
- Process samples as quickly as possible

Surface soils

- air dry and sieve through a 2 mm mesh
- microbial communities remain essentially intact for 3 weeks

Subsurface samples

- perform analyses immediately under sterile conditions (if not possible place samples in dry ice and ship overnight to lab for analysis next day)

Analysis for microorganisms

1. bacteria
   - cultural assay (choose culture medium carefully)
   - direct counts
   - antibodies
   - extraction and analysis of nucleic acids

Bacterial fractionation vs. in situ lysis for recovery of DNA from soil

Issue	Bacterial Fractionation	In situ Lysis
Yield of DNA	1-5 ug/g	1-20 ug/g
Representative?	Less representative, sorption	More representative
Source of DNA	Only bacteria	Mostly bacteria
Shearing	Less shearing	More shearing
Fragment size	50 kb	25 kb
Humic contamination	Less contaminated	More contaminated
Method ease	Slow, laborious	Faster, less laborious

Which method is preferred?

Mechanical Auger

Mechanical Auger means power operated augers.

The power required to rotate the auger depends on the type and size of auger and the type of soil.

Downwards pressure can be applied hydraulically, mechanically or by dead weight

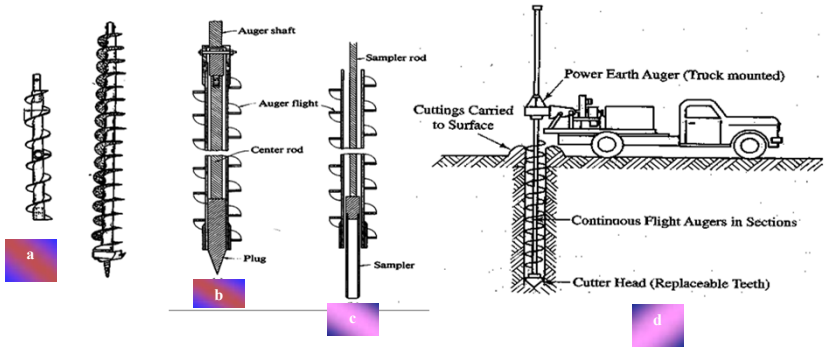



Helical Augers



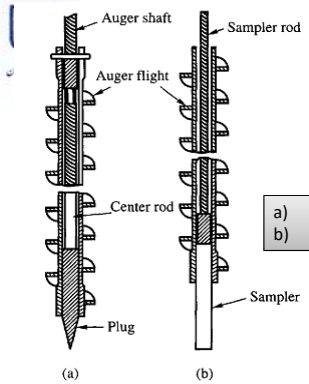

a) Plugged while advancing the auger
b) Plug removed and sampler attached

Hand Augar

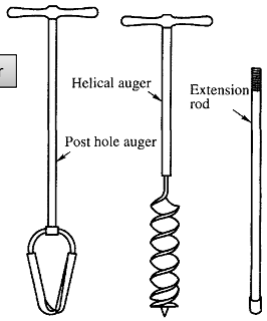

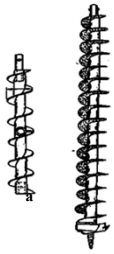

Continuous Flight Auger

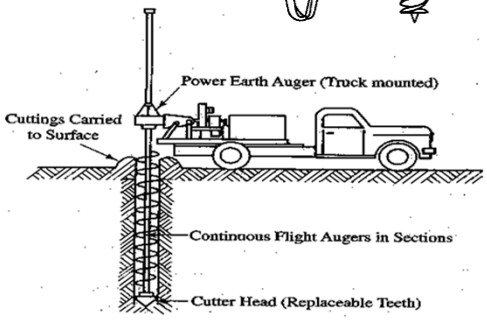

Truck mounted auger boring machine

Hand operated augers

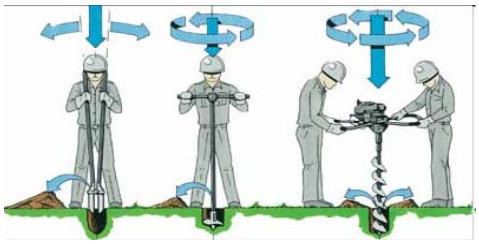



Power driven augers

i. Augar Drilling

1. Hand Augar:

- The hand augar (also called post-hole or Iwan augar) is a very simple hand tool used for drilling into soft soils down to maximum of 5-6m in small projects.
- Hand-augered holes can be made up to about 20m depth, although depth greater than about 8-10m is usually not practical.
- For hard soil and soil containing gravels boring with hand auger becomes difficult.
- The auger is rotated until it is full of soil, then it is withdrawn to remove the soil and the soil type present at various depths is noted.
- They can be used for soil exploration work for highways and small structures.
- The soil samples collected in this manner are disturbed but they can be used for classification test in laboratory such as grain-size determination and Atterberg limits.
- Auger boring may not be possible in very soft clay or coarse sand because the hole tends to collapse when auger is removed.

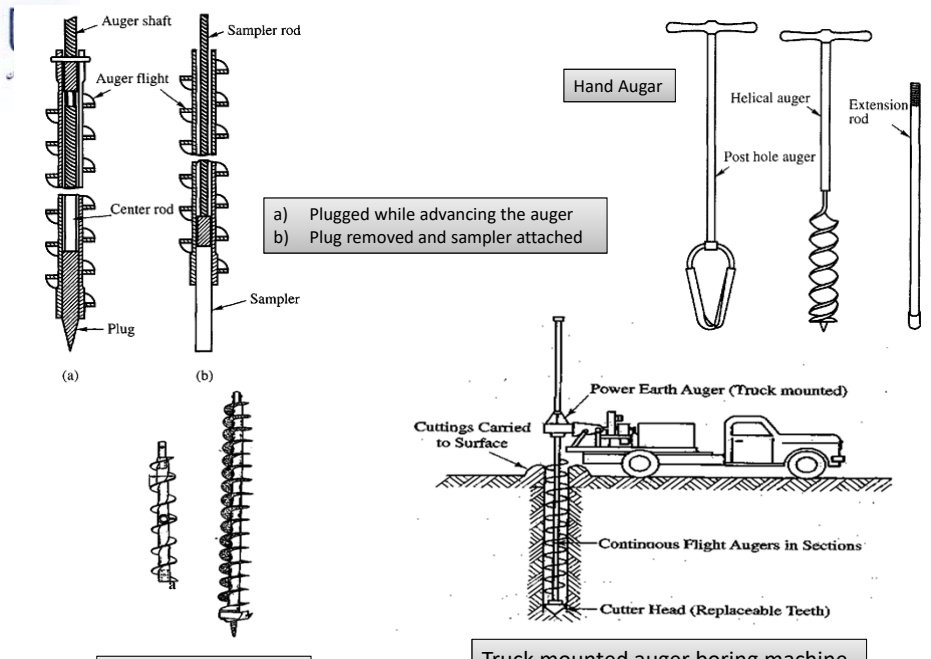

Solid Stem Continuous Flight Augers

Solid Stem Continuous Flight Augers

- Solid stem continuous flight auger drilling is generally limited to **stiff cohesive soils** where the boring walls are stable for the entire depth of the boring.



Solid Stem Continuous Flight Augers

- Following figure shows continuous flight augers being used with a drill rig.
- A drill bit is attached to the leading section of flight to cut the soil.

Solid Stem Continuous Flight Augers

- The flights act as a screw conveyor, bringing cuttings to the top of the hole.
- As the auger drills into the earth, additional auger sections are added until the required depth is reached.





Solid Stem Continuous Flight Augers

- Due to their limited application, continuous flight augers are generally not suitable for use in investigations requiring soil sampling.

Solid Stem Continuous Flight Augers

- When used, careful observation of the resistance to penetration and the vibrations or "chatter" of the drilling bit can provide valuable data for interpretation of the subsurface conditions.

Solid Stem Continuous Flight Augers

- Clay, or "fishtail", drill bits are commonly used in stiff clay formations (Figure).
- Carbide-tipped "finger" bits are commonly used where hard clay formations or interbedded rock or cemented layers are encountered.



Solid Stem Continuous Flight Augers

- Since finger bits commonly leave a much larger amount of loose soil, called slough, at the bottom of the hole, they should only be used when necessary.

Solid Stem Continuous Flight Augers

- Solid stem drill rods are available in many sizes ranging in outside diameter from 102 mm (4.0 in) to 305 mm (12.0 in) (Figure), with the 102 mm (4.0 in) diameter being the most common.

Auger



Solid Stem Continuous Flight Augers

- The lead assembly in which the drill bit is connected to the lead auger flight using cotter pins is shown in Figure.



Hollow Stem Continuous Flight Augers

Hollow Stem Continuous Flight Augers

- In general hollow stem augers are very similar to the continuous flight auger except, as the name suggests, it has a large hollow center.
- This is visually evident in Figure, where a solid stem flight and a hollow stem flight are pictured side-by-side.

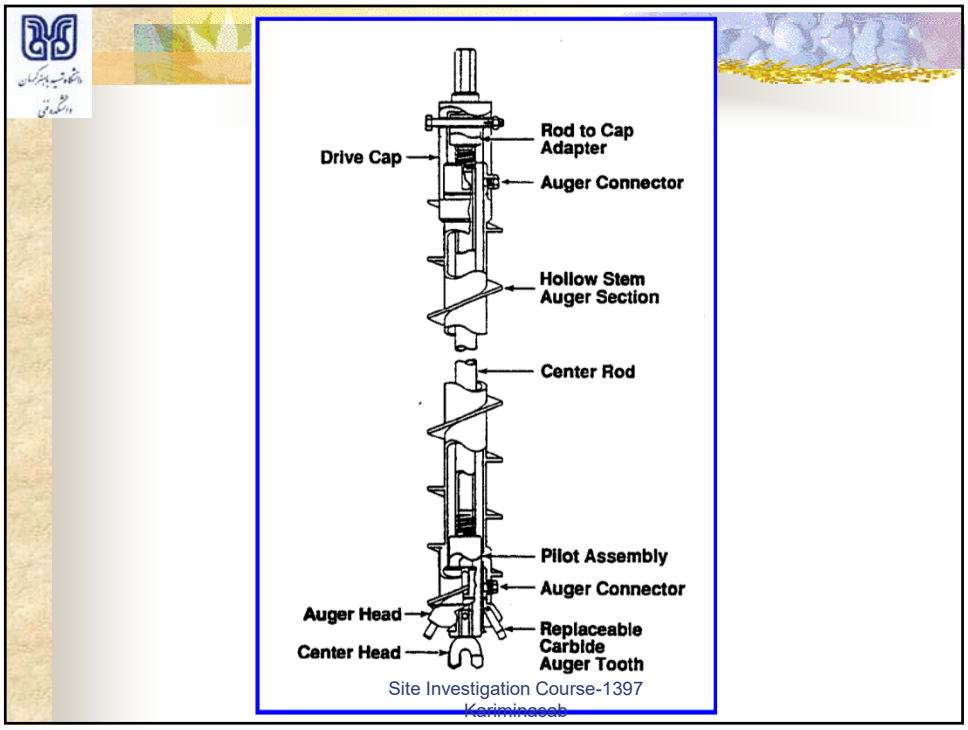
Drive Cap
Rod to Cap Adapter
Auger Connector
Hollow Stem Auger Section
Center Rod
Pilot Assembly
Auger Connector
Auger Head
Center Head
Replaceable Carbide Auger Tooth



Hollow Stem Continuous Flight Augers

- The various components of the hollow stem auger system are shown schematically in Figures.




Stepwise
DeJong &
Boulanger


DeJong &
Boulanger



Hollow Stem Continuous Flight Augers

- When the hole is being advanced, a center stem and plug are inserted into the hollow center of the auger.



Hollow Stem Continuous Flight Augers

- The center stem consists of rods that connect at the bottom of the plug or bit insert and at the top to a drive adapter to ensure that the center stem and bit rotate with the augers.

Hollow Stem Continuous Flight Augers

- Once the augers have advanced the hole to the desired sample depth, the stem and plug are removed.

Hollow Stem Continuous Flight Augers

- A sampler may then be lowered through the hollow stem to sample the soil at the bottom of the hole.
- If the augers have been seated into rock, then a standard core barrel can be used.

Hollow Stem Continuous Flight Augers

- Hollow-stem augering methods are commonly used in clay soils or in granular soils **above the groundwater level,** where the boring walls may be unstable.

Hollow Stem Continuous Flight Augers

- The augers form a temporary casing to allow sampling of the "undisturbed soil" below the bit.

Hollow Stem Continuous Flight Augers

- The hydrostatic water pressure acting against the soil at the bottom of the boring can significantly disturb the soil, particularly in granular soils or soft clays.

Hollow Stem Continuous Flight Augers

- Often the soils will heave and plug the auger, preventing the sampler from reaching the bottom of the boring.
- Where heave or disturbance occurs, the penetration resistance to the driven sampler can be significantly reduced.

Hollow Stem Continuous Flight Augers

- When this condition exists, it is advisable to halt the use of hollow-stem augers at the groundwater level and to convert to rotary wash boring methods.

Hollow Stem Continuous Flight Augers

- Alternatively the hollow-stem auger can be flooded with water or drilling fluid to balance the head; however, this approach is less desirable due to difficulties in maintaining an adequate head of water.

Rotary Wash Borings

Rotary Wash Borings

- The rotary wash boring method (Figures) is generally the most appropriate method for use in soil formations below the groundwater level.
- In rotary wash borings, the sides of the borehole are supported either with casing or with the use of a drilling fluid.

Rotary Wash Borings

- Where drill casing is used, the boring or is advanced sequentially by: (a) driving the casing to the desired sample depth,(b) cleaning out the hole to the bottom of the casing, and (c) inserting the sampling device and obtaining the sample from below the bottom of the casing.

Rotary Wash Borings

- Casing for rotary wash borings is typically furnished with inside diameters ranging from 60 mm to 130 mm.

Rotary Wash Borings

- Even with the use of casing, care must be taken when drilling below the groundwater table to maintain a head of water within the casing above the groundwater level.

Rotary Wash Borings

- Particular attention must be given to adding water to the hole as the drill rods are removed after cleaning out the hole prior to sampling.
- Failure to maintain an adequate head of water may result in loosening or heaving (blow-up) of the soil to be sampled beneath the casing.

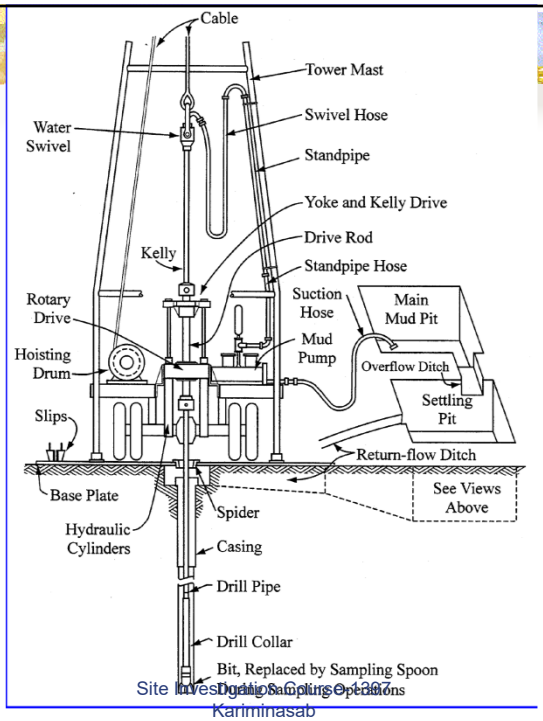

Rotary Wash Borings

- Two types of bits are often used with the rotary wash method (Figure).
- Drag bits are commonly used in clays and loose sands, whereas roller bits are used to penetrate dense coarse-grained granular soils, cemented zones, and soft or weathered rock.

Rotary Wash Borings

- Examination of the cuttings suspended in the wash fluid provides an opportunity to identify changes in the soil conditions between sample locations (Figure).

Sonic Drilling

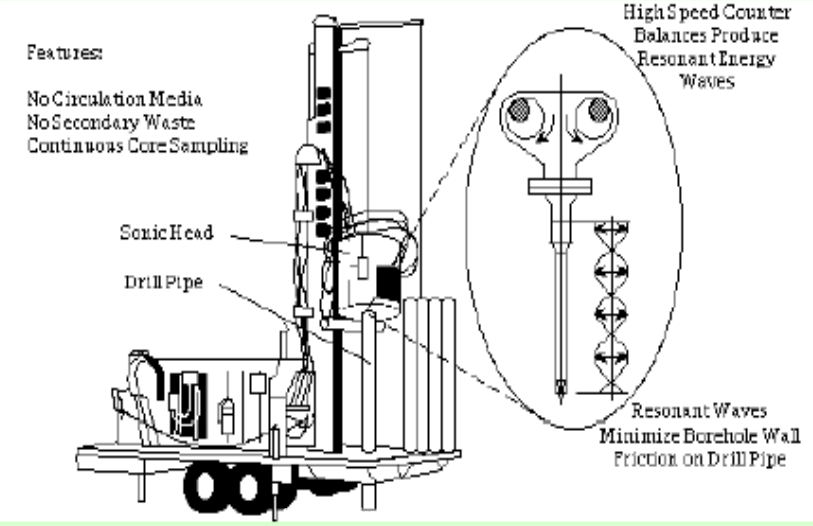

- Drilling Technology for
- ***High-Quality*** Continuous
- Soil Sampling and
- ***Efficient Borehole***
- ***Drilling*** Utilizing High
- Frequency Resonant
- Energy

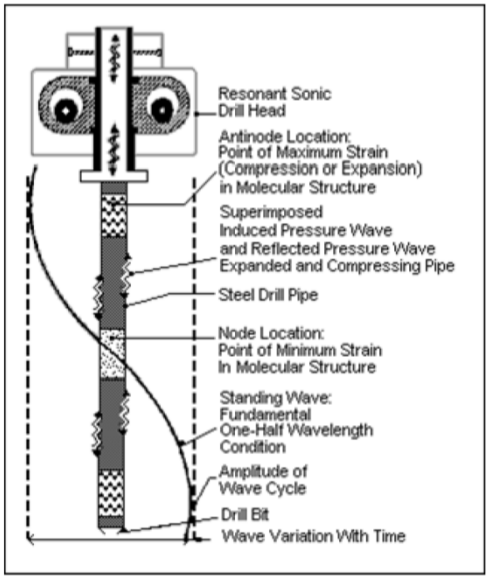

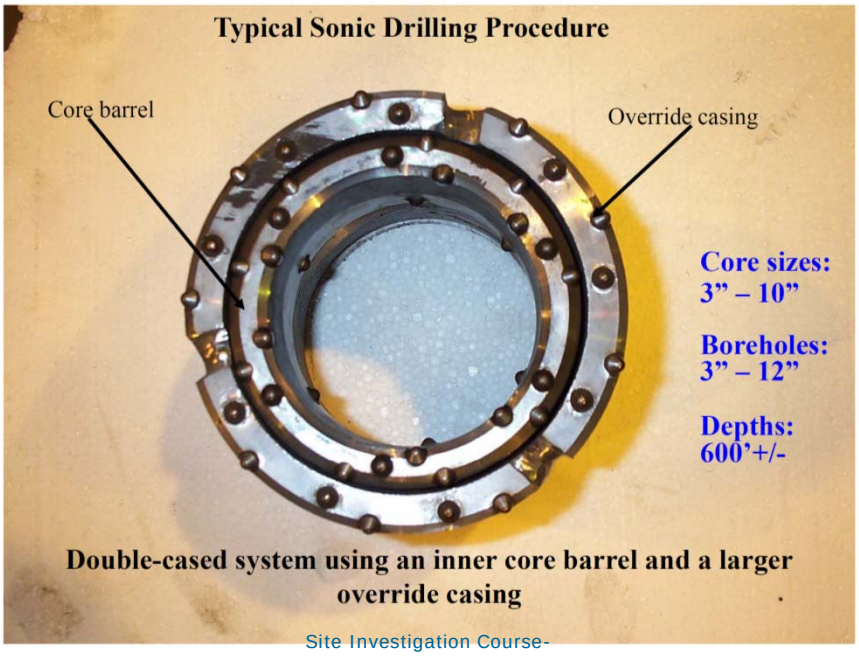

SONIC Drilling Process

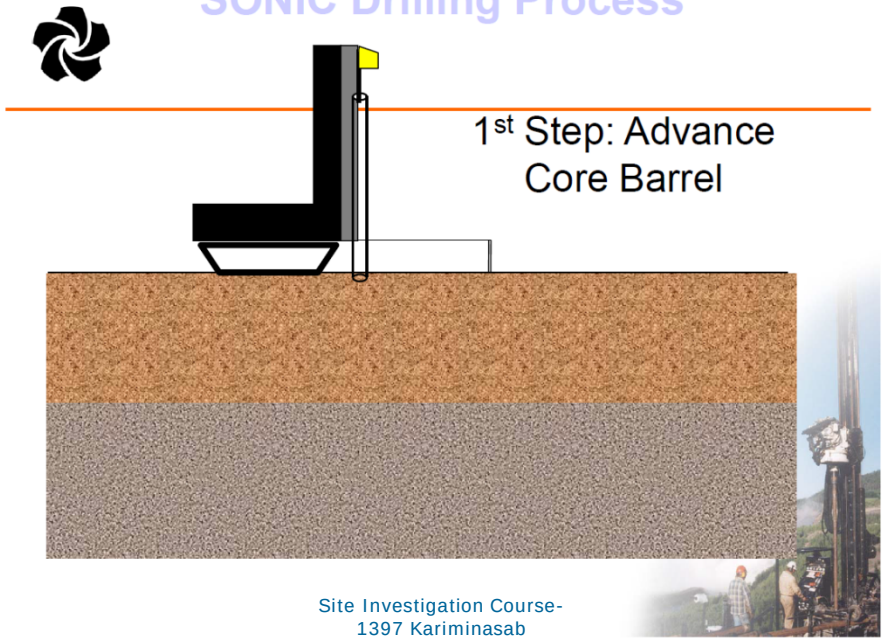

Site Investigation Course-
1397 Kariminasab

SONIC Drilling Process

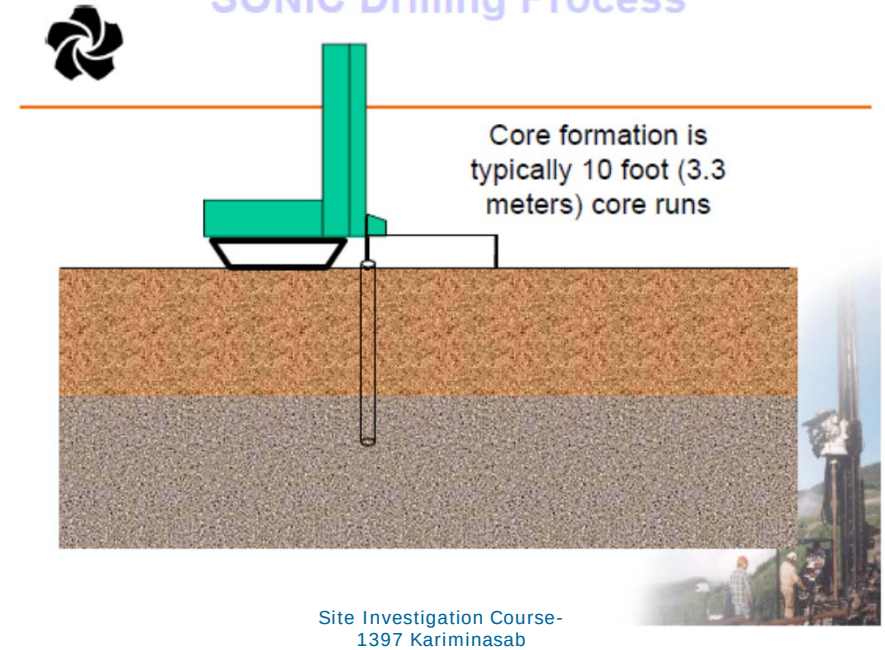

Site Investigation Course-
1397 Kariminasab

SONIC Drilling Process

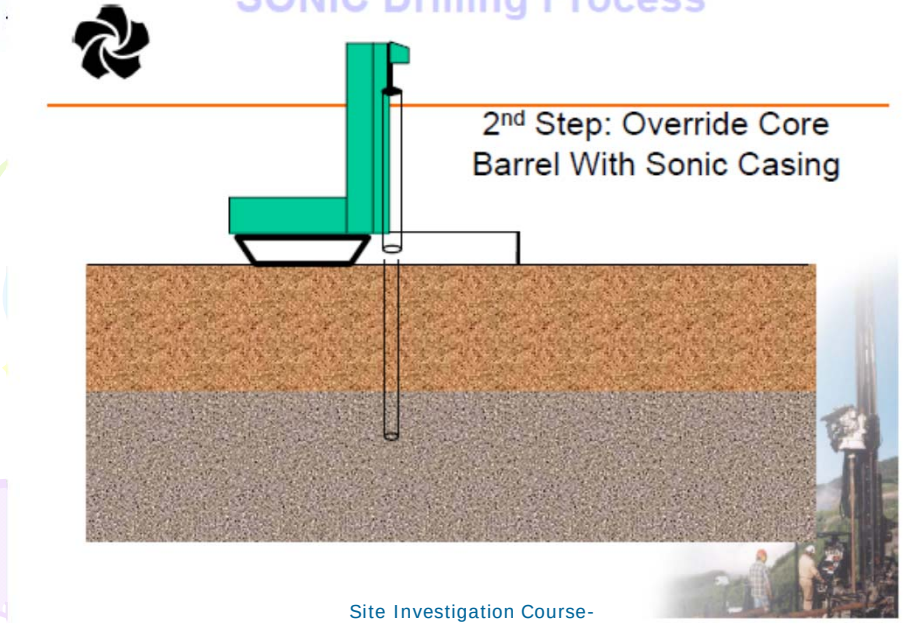

SONIC Drilling Process

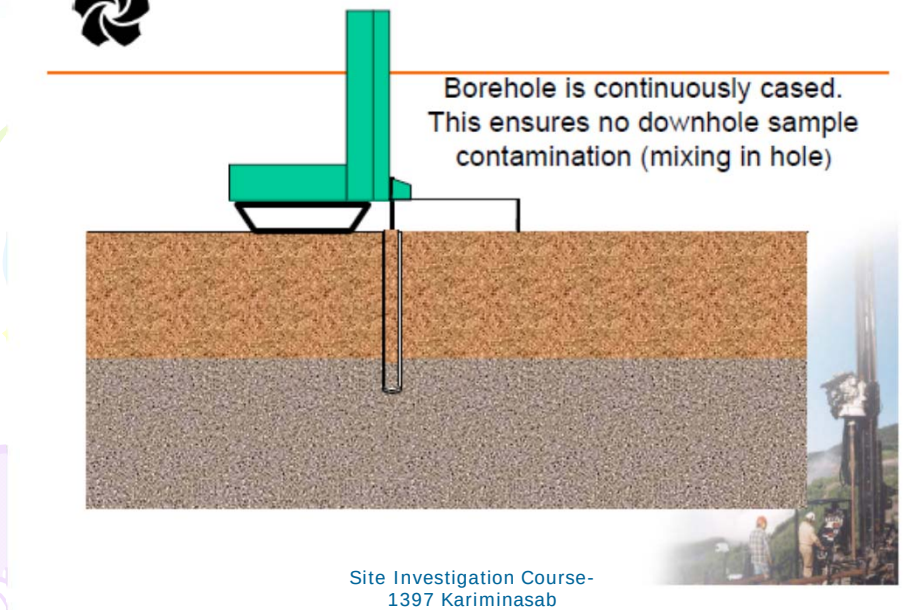

SONIC Drilling Process

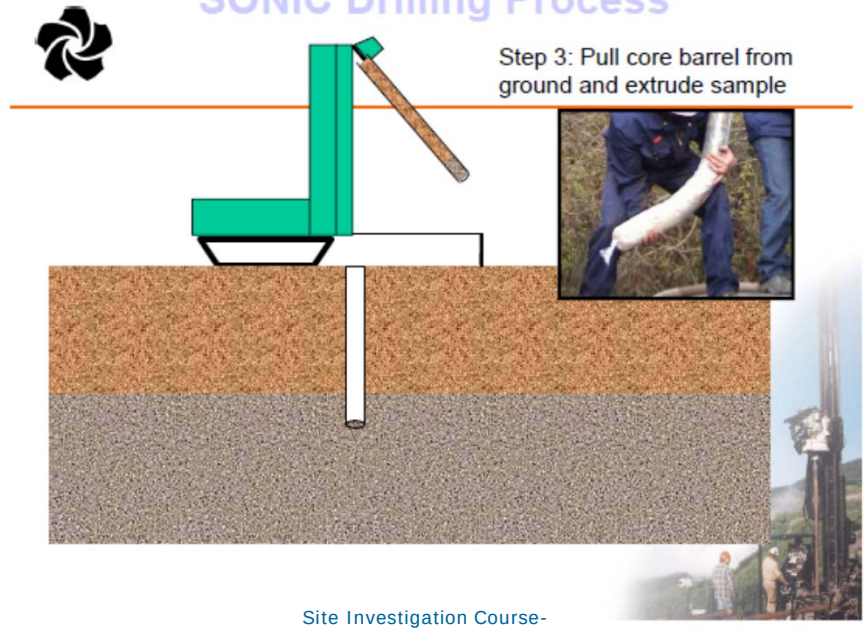

Site Investigation Course-
1397 Kariminasab

SONIC Drilling Process

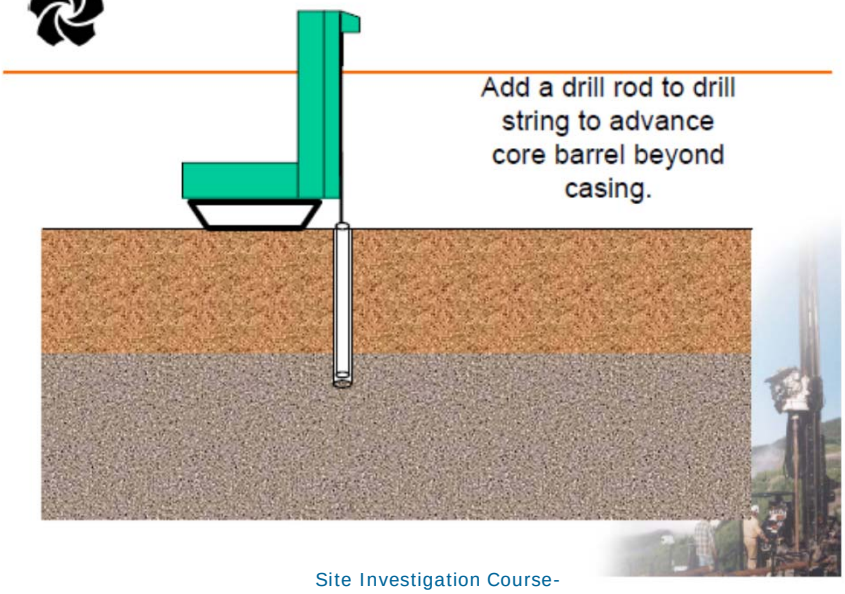

Site Investigation Course-
1397 Kariminasab

SONIC Drilling Process

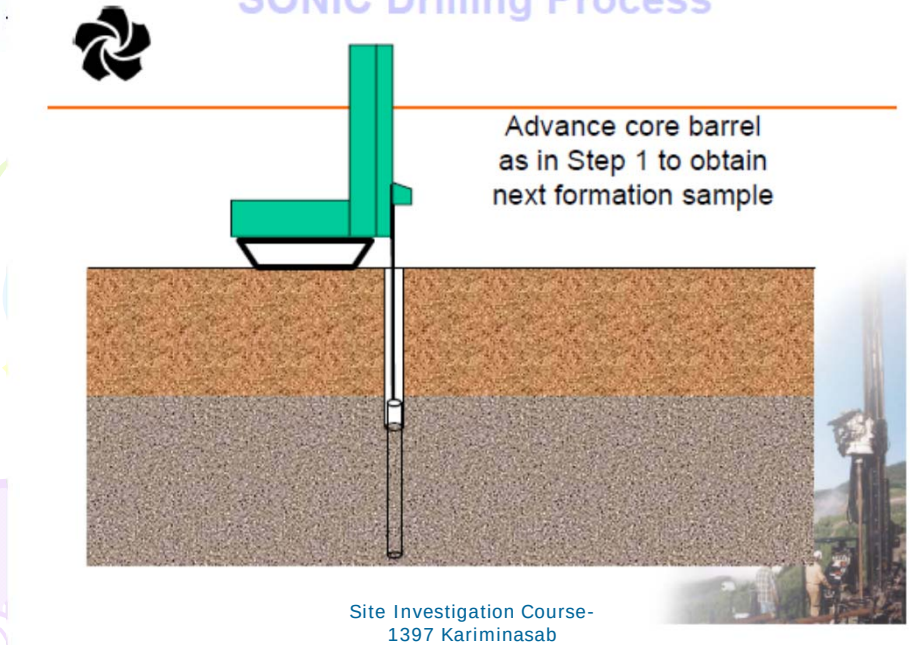

SONIC Drilling Process

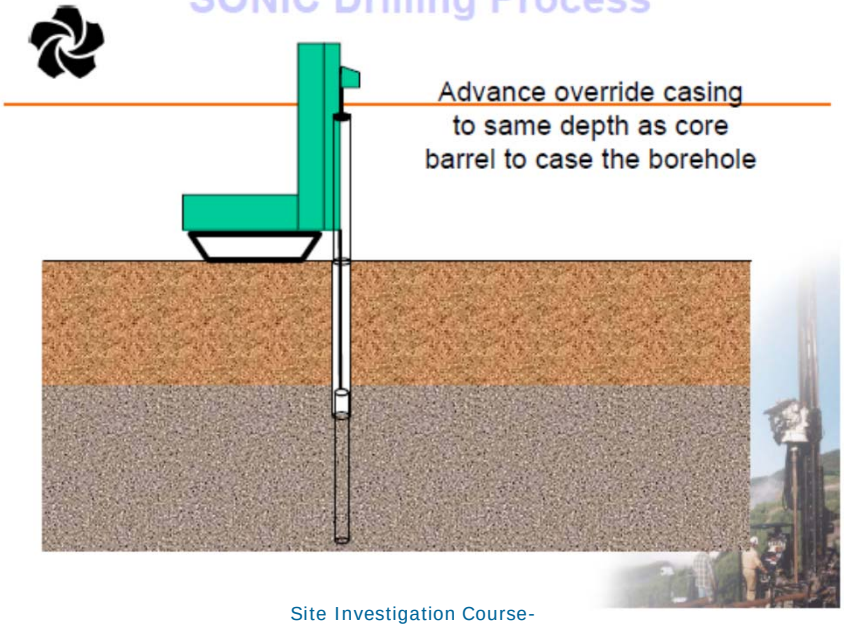

SONIC Drilling Process

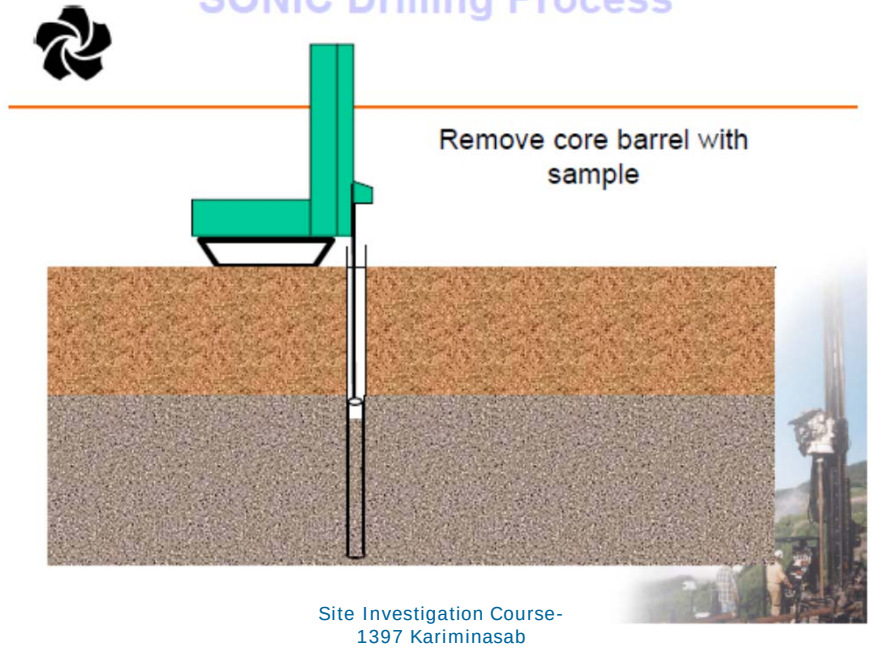

Site Investigation Course-
1397 Kariminasab

SONIC Drilling Process

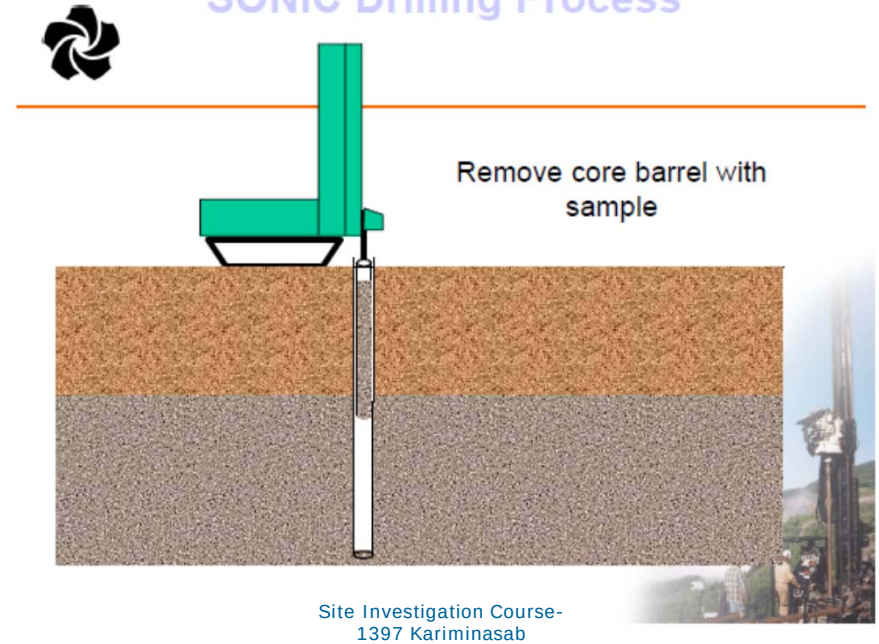

Site Investigation Course-
1397 Kariminasab

SONIC Drilling Process

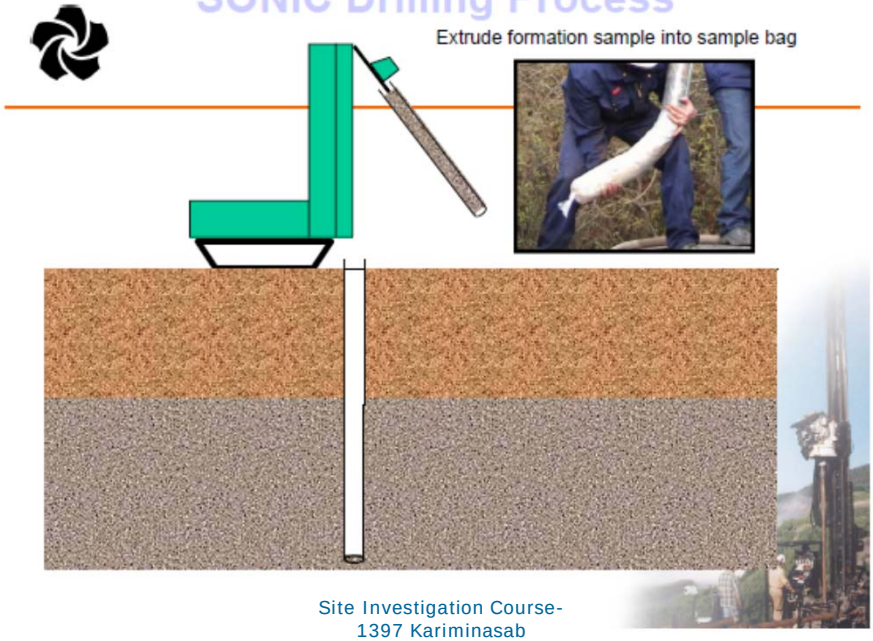

Continuous Core Sample Production

Core extrusion into plastic sleeve

Core samples opened for inspection





Core Sample Production - Alternate

Removal of solid liner after core run

Continuous core in solid liner





Cased borehole also allows for:

- ✓Split Spoons
- ✓Shelby Tubes
- ✓Conventional diamond coring



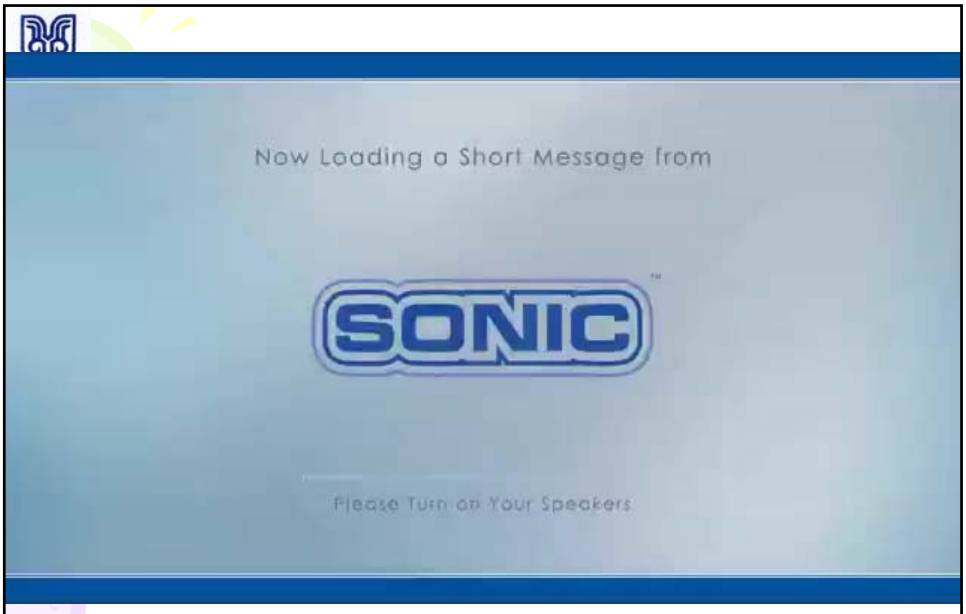

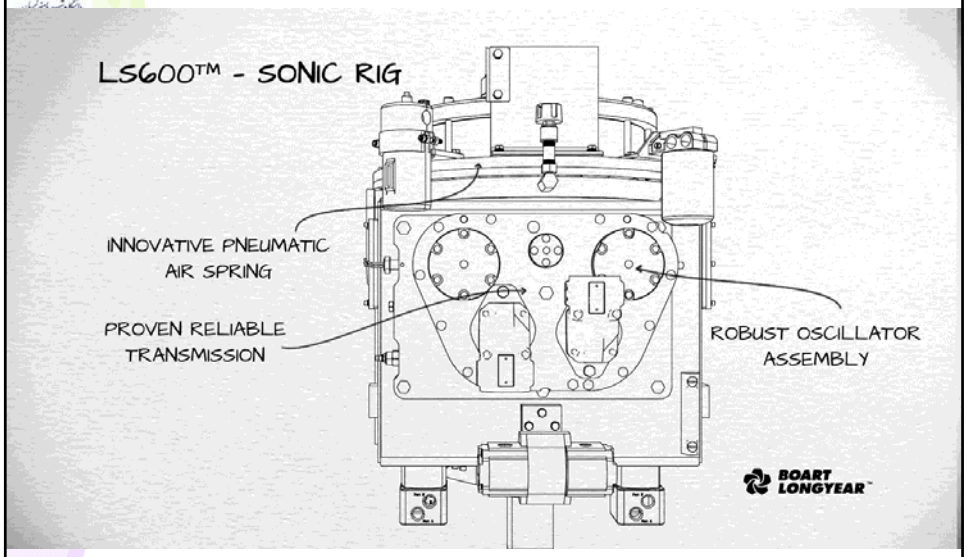

Sonic Drilling

- Sonic drilling is used for continuous sampling and monitoring well installation in unconsolidated and soft/fractured bedrock. The primary benefits of this technology are that very rapid drilling rates are possible combined with reduced volumes of secondary waste.
- Recent improvements in equipment design should lead to increased use in the future.
- A sonic rig uses an oscillator or head with eccentric weights driven by hydraulic motors to generate high sinusoidal force in a rotating pipe drill.
- The frequency of vibration (generally between 50 and 120 cycles per second) of the drill bit or core barrel can be varied to allow optimum penetration of subsurface materials.

Sonic Drilling

- A dual string assembly allows advancement of casing with the inner casing used to collect samples.
- Small amounts of air and water can be used to remove the material between the inner and outer casing.
- When a drill bit is used, most of the cuttings are forced into the borehole wall.
- A thin-wall or split-spoon sampler can be used to contain continuous samples.
- Sonic drilling is also referred to as vibratory drilling and rotosonic drilling.
- Sonic drilling is one of the only methods of effectively drilling in coarse granular materials such as mine waste rock.

Bucket Auger Borings

Bucket Auger Borings

- Bucket auger drills are used where it is desirable to remove and/or obtain large volumes of disturbed soil samples, such as for projects where slope stability is an issue.

Bucket Auger Borings

- Bucket auger borings are usually drilled with a 600 mm to 1200 mm diameter bucket. The bucket length is generally 600 mm to 900 mm and is basically an open-top metal cylinder having one or more slots cut in its base to permit the entrance of soil and rock as the bucket is rotated.

Bucket Auger Borings

- The bucket auger method is particularly useful for drilling in materials containing gravel and cobbles because the drilling bucket can auger through cobbles that may cause refusal for conventional drilling equipment.

