

بسمه تعالی

دانشگاه شهید باهنر کرمان
دانشکده فنی و مهندسی
بخش مهندسی معدن

بررسی ساختگاهی
ترم اول ۱۳۹۷
(۶)

سعید کریمی نسب

Site Investigation Course-1397
Kariminasab

ASTM
D 420 – 98

Standard Guide to Site Characterization for Engineering Design and Construction Purposes

ASTM
D 420 – 98

- Investigation and identification of subsurface materials involves both simple and complex techniques that may be accomplished by many different procedures and may be variously interpreted.

ASTM
D 420 – 98

- These studies are frequently site specific and are influenced by geological and geographical settings, by the purpose of the investigation, by design requirements for the project proposed, and by the background, training, and experience of the investigator.

ASTM
D 420 – 98

- This document is a guide to the selection of the various ASTM standards that are available for the investigation of **soil, rock, and ground water** for projects that involve surface or subsurface construction, or both.

ASTM
D 420 – 98

This guide refers to ASTM methods by which soil, rock, and ground water conditions may be determined.

The objective of the investigation should be to identify and locate, both horizontally and vertically, significant soil and rock types and

ground water conditions present within a given site area and to establish the characteristics of the subsurface materials by sampling or in situ testing, or both.

ASTM: D 420 – 98
Significance and Use

- **a- An adequate soil, rock, and ground water investigation will provide pertinent information for decision making on one or more of the following subjects:**

ASTM: D 420 – 98
Significance and Use

1- Optimum location of the structure, both vertically and horizontally, within the area of the proposed construction.

2- Location and preliminary evaluation of suitable borrow and other local sources of construction aggregates.

ASTM: D 420 – 98
Significance and Use

3-Need for special excavating and dewatering techniques with the corresponding need for information, even if only approximate, on the distribution of soil water content or pore pressure, or both, and on the piezometric heads and apparent permeability (hydraulic conductivity) of the various subsurface strata.

ASTM: D 420 – 98
Significance and Use

4-Investigation of slope stability in natural slopes, cuts, and embankments.

5-Conceptual selection of embankment types and hydraulic barrier requirements.

ASTM: D 420 – 98
Significance and Use

6-Conceptual selection of alternate foundation types and elevations of the corresponding suitable bearing strata.

7- Development of additional detailed subsurface investigations for specific structures or facilities.

ASTM: D 420 – 98
Significance and Use

- **b-The investigation may require the collection of sufficiently large soil and rock samples of such quality as to allow adequate testing to determine the soil or rock classification or mineralogic type, or both, and the engineering properties pertinent to the proposed design.**

ASTM: D 420 – 98
Reconnaissance of Project Area

a-Available technical data from the literature or from personal communication should be reviewed before any field program is started.

ASTM: D 420 – 98
Significance and Use

The intent is to provide a checklist to assist in the design of an exploration or investigation plan.

ASTM: D 420 – 98
Exploration Plan

a-Available project design and performance requirements must be reviewed prior to final development of the exploration plan.

Preliminary exploration should be planned to indicate the areas of conditions needing further investigation.

A complete soil, rock, and ground water investigation should encompass the following activities:

ASTM: D 420 – 98

Exploration Plan

1-Review of available information, both regional and local, on the geologic history, rock, soil, and ground water conditions occurring at the proposed location and in the immediate vicinity of the site

ASTM: D 420 – 98

Exploration Plan

2-Interpretation of aerial photography and other remote sensing data.

3-Field reconnaissance for identification of surficial geologic conditions, mapping of stratigraphic exposures and outcrops, and examination of the performance of existing structures.

ASTM: D 420 – 98

Exploration Plan

4-On site investigation of the surface and subsurface materials by geophysical surveys, borings, or test pits.

ASTM: D 420 – 98

Exploration Plan

5-Recovery of representative disturbed samples for laboratory classification tests of soil, rock, and local construction material.

These should be supplemented by undisturbed specimens suitable for the determination of those engineering properties pertinent to the investigation.

ASTM: D 420 – 98

Exploration Plan

6-Identification of the position of the ground water table, or water tables, if there is perched ground water, or of the piezometric surfaces if there is artesian ground water.

ASTM: D 420 – 98

Exploration Plan

The variability of these positions in both short and long time frames should be considered. Color mottling of the soil strata may be indicative of long-term seasonal high ground water positions.

ASTM: D 420 – 98

Exploration Plan

7-Identification and assessment of the location of suitable foundation material, either bedrock or satisfactory loadbearing soils.

ASTM: D 420 – 98

Exploration Plan

8-Field identification of soil sediments, and rock, with particular reference to type and degree of decomposition (for example, saprolite, karst, decomposing or slaking shales), the depths of their occurrence and the types and locations of their structural discontinuities.

ASTM: D 420 – 98

Exploration Plan

9- Evaluation of the performance of existing installations, relative to their structure foundation material and environment in the immediate vicinity of the proposed site.

ASTM: D 420 – 98

Equipment and Procedures for Use in Exploration

The type of equipment required for a subsurface investigation depends upon various factors, including the type of subsurface material, depth of exploration, the nature of the terrain, and the intended use of the data.

ASTM: D 420 – 98

Equipment and Procedures for Use in Exploration

Hand Augers, Hole Diggers, Shovels, and Push Tube Samplers are suitable for exploration of surficial soils to depths of 1 to 5 m.

ASTM: D 420 – 98

Equipment and Procedures for Use in Exploration

Earth Excavation Equipment, such as backhoes, draglines, and drilled pier augers (screw or bucket) can allow in situ examination of soil deposits and sampling of materials containing very large particles.

The investigator should be aware of the possiblity of permanent disturbance of potential bearing strata by unbalanced pore pressure in test excavations.

ASTM: D 420 – 98

Equipment and Procedures for Use in Exploration

3-Soil and rock boring and drilling machines and proofing devices may be used to depths of 60 to 100 m in soil and to a much greater depth in rock.

4-Well drilling equipment may be suitable for deep geologic exploration. Normally samples are in the form of sand-sized cuttings captured from the return flow, but coring devices are available.

ASTM: D 420 – 98

Geophysical Exploration

1-Remote sensing techniques may assist in mapping the geological formations and for evaluating variations in soil and rock properties.

Satellite and aircraft spectral mapping tools, such as LANDSAT, may be used to find and map the areal extent of subsurface materials and geologic structure.

ASTM: D 420 – 98

Geophysical Exploration

Interpretation of aircraft photographs and satellite imagery can locate and identify significant geologic features that may be indicative of faults and fractures.

Some ground control is generally required to verify information derived from remote sensing data.

ASTM: D 420 – 98

Geophysical Exploration

Geophysical survey methods may be used to supplement borehole and outcrop data and to interpolate between holes.

Seismic, ground penetrating radar, and electrical resistivity methods can be particularly valuable when distinct differences in the properties of contiguous subsurface materials are indicated.

Site Investigation Course-1397
Kariminasab

ASTM: D 420 – 98

Geophysical Exploration

3-Shallow seismic refraction/reflection and ground penetrating radar techniques can be used to map soil horizons and depth profiles, water tables, and depth to bedrock in many situations, but depth penetration and resolution vary with local conditions.

ASTM: D 420 – 98

Geophysical Exploration

Electromagnetic induction, electrical resistivity, and induced polarization (or complex resistivity) techniques may be used to map variations in water content, clay horizons, stratification, and depth to aquifer/bedrock.

ASTM: D 420 – 98

Geophysical Exploration

Other geophysical techniques such as gravity, magnetic, and shallow ground temperature methods may be useful under certain specific conditions.

ASTM: D 420 – 98

Geophysical Exploration

Deep seismic and electrical methods are routinely used for mapping stratigraphy and structure of rock in conjunction with logs. Crosshole shear wave velocity measurements can provide soil and rock parameters for dynamic analyses.

Site Investigation Course-1397
Kariminasab

ASTM: D 420 – 98

Geophysical Exploration

The seismic refraction method may be especially useful in determining depth to, or rippability of, rock in locations where successively denser strata are encountered.

ASTM: D 420 – 98

Geophysical Exploration

The seismic reflection method may be useful in delineating geological units at depths below 3 m.

It is not constrained by layers of low seismic velocity and is especially useful in areas of rapid stratigraphic change

ASTM: D 420 – 98

Geophysical Exploration

The electrical resistivity method, Method G 57, may be similarly useful in determining depth to rock and anomalies in the stratigraphic profile, in evaluating stratified formations where a denser stratum overlies a less dense stratum, and in

location of prospective sand-gravel or other sources of borrow material.

ASTM: D 420 – 98

Geophysical Exploration

Resistivity parameters also are required for the design of grounding systems and cathodic protection for buried structures.

Site Investigation Course-1397
Kariminasab

ASTM: D 420 – 98

Geophysical Exploration

The ground penetrating radar method may be useful in defining soil and rock layers and manmade structures in the depth range of 1⁄3 to 10 m.

ASTM: D 420 – 98

Sampling

Obtain samples that adequately represent each subsurface material that is significant to the project design and construction.

The size and type of sample required is dependent upon the tests to be performed, the relative amount of coarse particles present, and the limitations of the test equipment to be used.

Types of Investigation

- Generally, there are five types of field subsurface investigation methods, best conducted in this order:
- 1. Remote sensing
- 2. Geophysical investigations
- 3. Disturbed sampling
- 4. In-situ testing
- 5. Undisturbed sampling

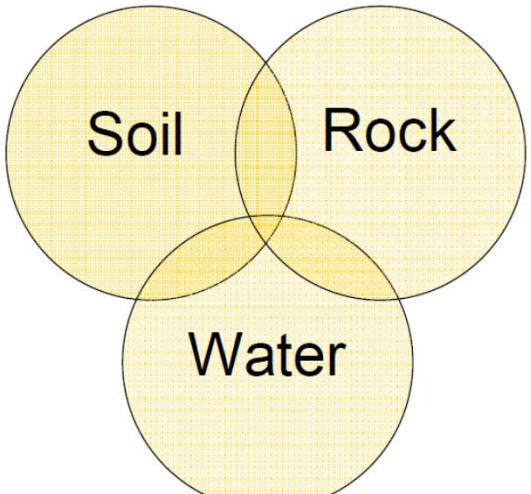

Soil Exploration

- Determination of surface and subsurface soil conditions and features in an area of proposed construction that may influence the design and construction and address expected post construction problems. Also known as soil investigation.

Site Investigation (SI) Objective

- Obtain sufficient information to enable a safe and economic design to be made and to avoid any difficulties during construction

SI Requirements

- Sequence, thickness and lateral extent of
- soil strata and where appropriate level of bedrock
- Obtain representative samples of soils (and rock) for identification and classification and relevant soil parameters

SI Requirements

- Identify groundwater conditions
- Insitu tests to access appropriate soil and/or rock characteristics

Soil Exploration

1. **Topographic Survey**
   - TSs provides information regarding ground surface feature of the site (i.e., surface condition of the site)

2. **Soil Exploration (Site Investigation)**
   - It provides data regarding subsoil conditions (i.e., underground condition), groundwater position and its fluctuations etc.

Purpose and Objectives of Soil Investigation

The primary objective of the site investigation is as follows:

1. To assess the sequence, thickness and lateral extent of the soil strata and, where appropriate, the level of bedrock.

Purpose and Objectives of Soil Investigation

2. To obtain representative samples of the soils (and rock) for identification and classification to determine the relevant soil parameters.

3.To determine the position of GWT and limits of its fluctuation during wet/dry season.

Purpose and Objectives of Soil Investigation

Thus exploration essentially provides information to decide about:

i) The suitability of the site for proposed work ii) To develop economical design iii) To predict any construction problems along with their possible remedies.

Investigation Phases

1.Feasibility Phase (Reconnaissance):

It generally involves collection of background information about the site. Following information is collected:

Investigation Phases

1.Feasibility Phase (Reconnaissance):

1. **Project Details**
   - Type of structure, intended use of structure, construction method, etc.
- **Surface and Subsurface Conditions of the site**
  - Study of topographic/geologic maps, aerial photographs, data from previous investigations, satellite imagery, etc.
- **Study of existing structures in the area**

Site Investigation Course-1397
Kariminasab

Investigation Phases
2.Preliminary Investigation

- Location of bedrock is established by drilling a few holes. Position of GWT may also be established.

Investigation Phases
3.Detailed Investigation

- This phase may include test pits excavation, boreholes, in-situ testing and collection of both disturbed and undisturbed soil samples for detailed laboratory testing/analysis. GWT may also be monitored by installing piezometers.

Investigation Phases

4.Construction/Post Construction Investigation

- Sometimes monitoring of movement of structure and monitoring of groundwater fluctuations, both during and after construction, may be required.

Amount of Exploration

- By amount of exploration is meant to decide about the extent of investigation i.e., to determine the number, location, and depth of open excavations (pits, trenches, etc.) and borings/drillings.

- The extent of exploration depends upon many factors, major being the following:

Amount of Exploration

1. Site condition (variability of soil/rock strata and GWT depth at site)
2. Nature and extent of the project. (building, highway, dam, etc.)
3. Availability of time, fund and equipment for exploration.

- The main rule for determining the extent of investigations is that there is no hard and fast rule for this purpose.

How Much Site Investigation?

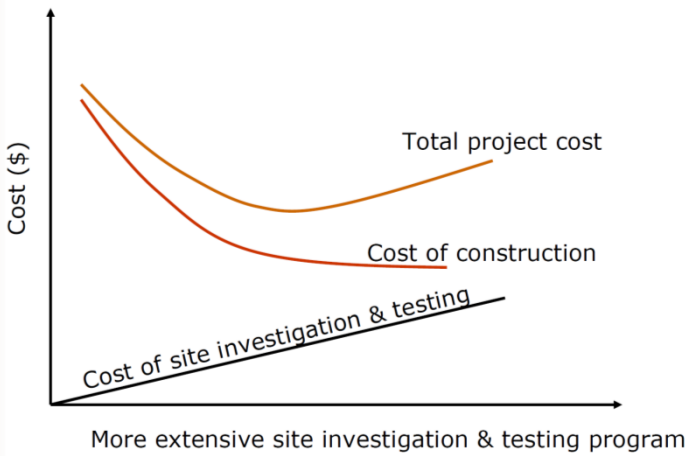

How Much Site Investigation?

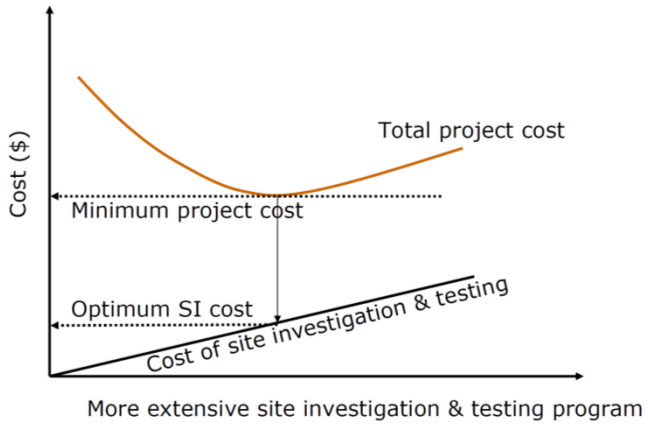

Risks and Consequences

- What is the consequence of failure or changing ground conditions?
- What will it cost to fix?
- Are people life in danger?
- Economic and social costs?

Methods of Investigation

- The methods to determine the sequence, thickness and lateral extent of the soil strata and, where appropriate the level of bedrock. The common methods include:

1. **Test pits**
2. **Boring or drilling**

1. Test Pits

- The excavation of test pits is a simple and reliable method.
- The maximum depth is limited to 4-5m only.
- If the pit is to be extend below the GWT, some form of dewatering is necessary.

1. Test Pits

- The in-situ conditions are examined visually.
- It is easy to obtain disturbed and undisturbed samples.
- Block samples can be cut by hand tools and tube samples can be taken from the bottom of the pit.
- Test pits are suitable for investigations in all type of soil, including those containing cobbles or boulders.

1. Test Pits

- Walls of the test pit indicate four layers (1) Clayey silt (2) Sandy silt (3) Clean sand (4) Sandy gravel

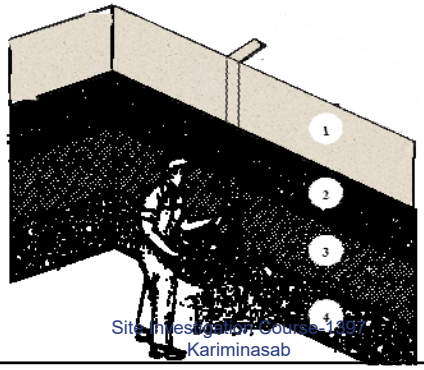

Test Pits



Test Pits



Test Pits



2. Boring or Drilling:

- Boring refers to advancing a hole in the ground.
- Boring is required for the following:
  - To obtain representative soil and rock samples for laboratory tests.
  - To identify the groundwater conditions.
  - Performance of in-situ tests to assess appropriate soil characteristics.

2. Boring or Drilling:

- Some of the common types of boring are as follows:
  - Auger boring
    - Hand Augar
    - Mechanical Augar
  - Rotary drilling
  - Wash boring
  - Percussion boring

Mechanical Auger

Mechanical Auger means power operated augers.

The power required to rotate the auger depends on the type and size of auger and the type of soil.

Downwards pressure can be applied hydraulically, mechanically or by dead weight

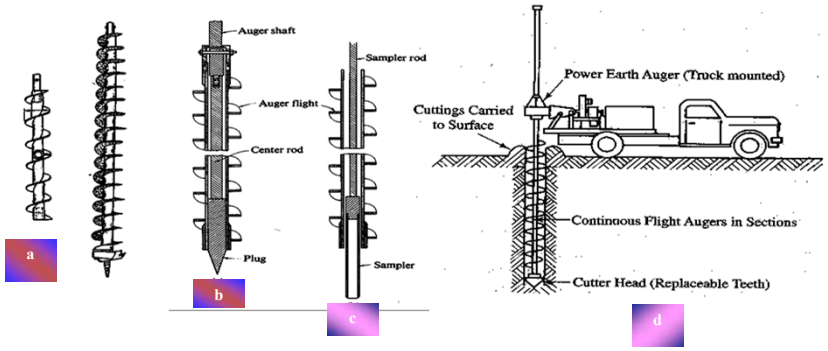



Helical Augers



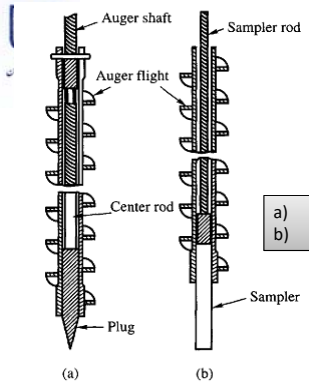

a) Plugged while advancing the auger
b) Plug removed and sampler attached

Hand Augar

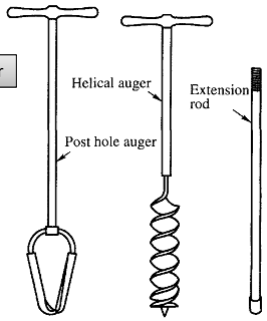

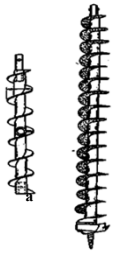

Continuous Flight Auger

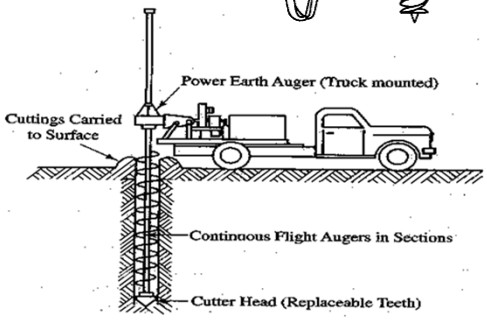

Truck mounted auger boring machine

Hand operated augers

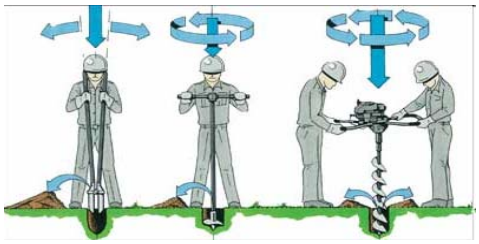



Power driven augers

Post Augur





Augar Drilling

The hand augar (also called post-hole or Iwan augar) is a very simple hand tool used for drilling into soft soils down to maximum of 5-6m in small projects.

Hand-augered holes can be made up to about 20m depth, although depth greater than about 8-10m is usually not practical.

Augar Drilling

For hard soil and soil containing gravels boring with hand auger becomes difficult.

The auger is rotated until it is full of soil, then it is withdrawn to remove the soil and the soil type present at various depths is noted.

They can be used for soil exploration work for highways and small structures.

Augar Drilling

The soil samples collected in this manner are disturbed but they can be used for classification test in laboratory such as grain-size determination and Atterberg limits.

Auger boring may not be possible in very soft clay or coarse sand because the hole tends to collapse when auger is removed.

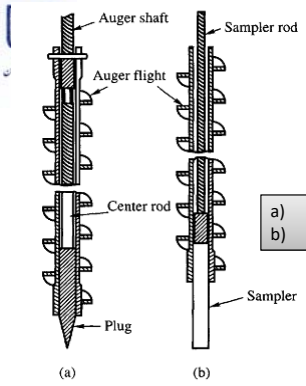

a) Plugged while advancing the auger
b) Plug removed and sampler attached

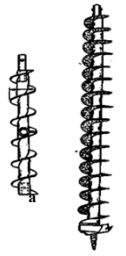

Continuous Flight Auger

Hand Augar

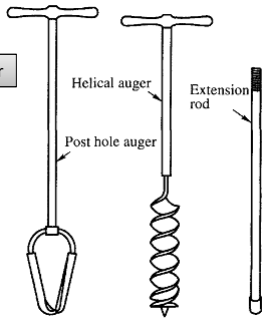

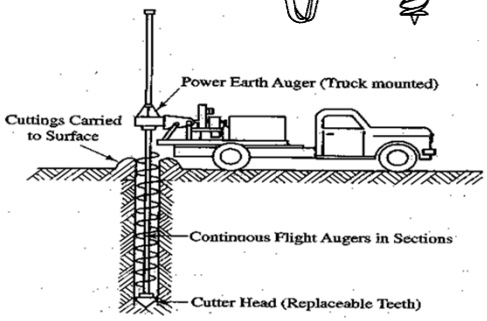

Truck mounted auger boring machine

Site Investigation Course-1397
Kariminasab